DOWNTOWN BANNER DETAIL

NOT TO SCALE

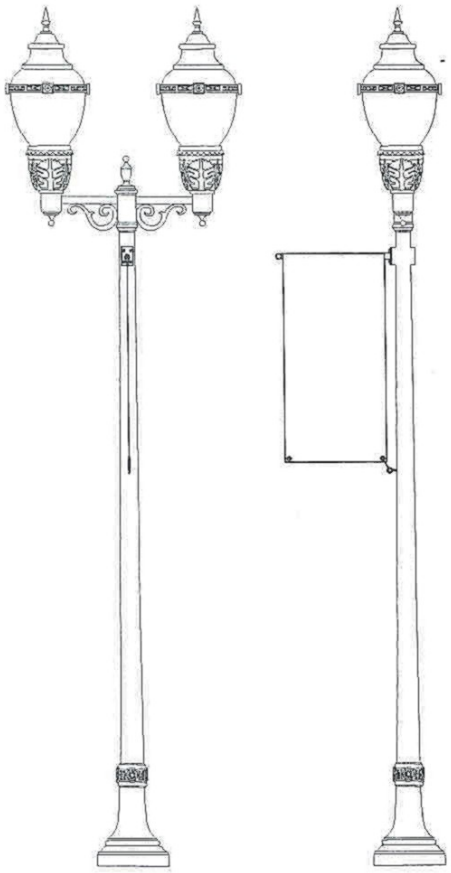

MOUNT ELEVATION

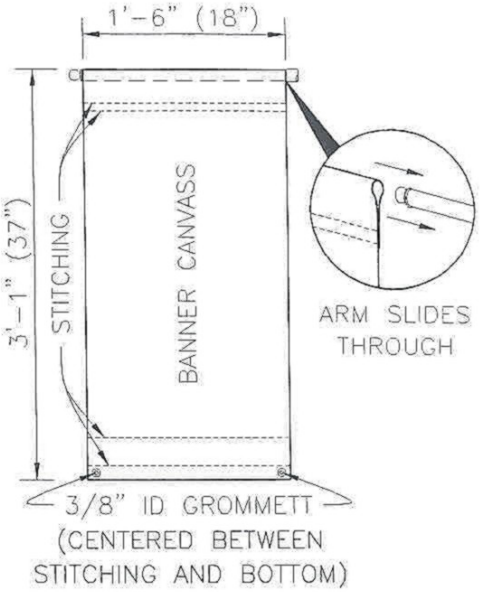

FRONT

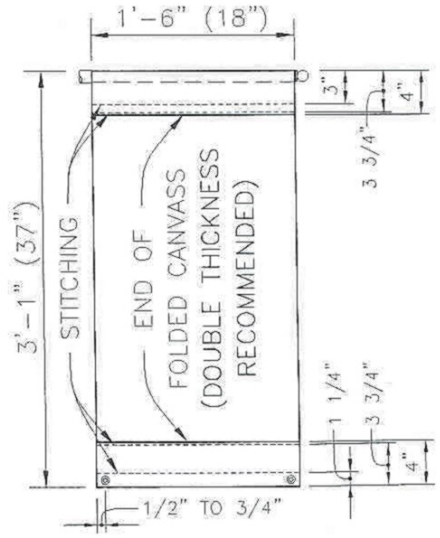

BACK